Development of Dual Shaft Multi Blade Waste Plastic Shredder for Recycling Purpose

Asmamaw Tegegne[1], Abebe Tsegaye[2], Ermias Ambaye[3], Rezen Mebrhatu[4]

[1]*Federal Technical and Vocational Education and Training Institute, Ethiopia*
[2]*Dila Polytechnic College, Ethiopia*
[3]*Nefas Silk Polytechnic College, Ethiopia*
[4]*Addis Ababa Polytechnic College, Ethiopia*

Abstract- **Plastics are one of the most essential engineering materials used for different applications. On processing plastic materials cutting in to the required size is one of the key operations. Cutting can be carried out using hand or motor driven machine. Shredder machine is commonly used for cutting the primary manufactured and waste plastics for further processing. Waste plastics thrown in land affect the environment and cause pollution. To reduce the pollution due to waste plastics recycling is essential task. However multi bladed and compacted in size shredder machine is one of the problems in recycling process of these waste plastics. Thus the objective of this project is to develop electrically driven dual shafted-multi bladed shredder machine using locally available machine construction materials for the purpose of recycling waste plastics for further use. Experimental method that is essential for variable and parameter control was used to carry out this project. Purposive sampling method was used for sampling and sample size was 1227x854x700mm. Angle and sharpness of the blades, space between the blades etc. were considered as essential variables and cutting speed, revolution per minute were considered as some of the parameters. Simple manufacturing tools including measuring tools and machines were used for constructing the shredder.**

The 1.5kwtt capacity motor driven with a production rate of 11kg/per hr. shredder was developed and tested as well as approved. The total cost of the shredder was 1455.48USD and is affordable. Using the newly developed machine enhances economic development by saving the foreign currency spends for the provision of new machines.

Key words- **Waste plastic, Shredder, environmental Pollution, recycling, small and medium enterprises**

I. INTRODUCTION

Plastics are nowadays the most important engineering materials in which the consumption is very high by volume. As stated in the work of [1], since the emergence of plastics, due to more frequent applications in all aspects of industry, these materials have the high demand and in the world market for the production of various items. As discussed in [7], the Society of the Plastics Industry (SPI) established a classification system in 1988 to allow consumers and recyclers to identify different types of plastics. According to author [6], this guide provides a basic outline of the different types of plastics. Plastics are among common engineering materials used largely for different applications to satisfy human needs and can be grouped as thermoplastic as well as thermo set. Polyethylene (PET) plastics are large in volume and are most commonly used as food packaging, where it is important to create an oxygen barrier to protect against spoilage. Plastics are used in the form of sheets, bottles, packages, pipes and others and are used for holding and packing foods and drinks, for sealing, covers and other purposes. As underlined in **[4],** the manufacture of plastics produces a lot of harmful pollutants which manufacturing companies need to deal with properly. Used and unwanted plastics are not always easy to dispose of. If buried in landfill sites they will take a very long time to rot. Plastics are very important properties, which made such a strong necessity to modern living, but may well cause problems after use and are very difficult to degrade. In the view of [9], plastic food packaging increases the shelf life of foods, and provides a cheap, hygienic, and very versatile range of wrappings.

Although there are obvious advantages for the food industry, the huge increase in plastic packaging has greatly increased plastic wastes, and consequently, mess is the result. Man after use plastic utilities thrown in a disorganizing manner and cause land fill problems, sewerage blockings, polluted environments and brings economic crisis for the nation due to health hazards . Such kinds of problems are visible in Ethiopia in almost all sites both in the rural and urban areas in sewerages and rod sides, in river banks, and grass lands and even in parks. During the survey of the working group in Addis Ababa and some surrounding areas it has been found that large amount of plastics especially bottles, sheet and packages of thermoplastics probably polyethylene groups have been accumulated and dispersed in large areas and become challenges for both rural and urban dwellers.

The municipality of Addis Ababa City organizes small and micro enterprises that collect those waste plastic items like water bottles, oil containers and some other related materials to control the pollution. However the problem is increasing continuously in a large volume. Besides becoming source of environmental problems, plastics affect health of animals. Sewerage system of the city has been blocking every time by plastics and other wastes and every year the municipality spent thousands of birr for cleaning and maintenance purpose.

Used plastic material (wastes) can be changed into raw materials by using an appropriate technology which enables to shred, to melt and to recycling. Author [2] stated that, although recycled materials might be inferior in quality, there is still a wide range of products where the quality is not an essential factor, such as dustbin bags.

The main problem with recycling plastics is their collection and sorting. Some very expensive machinery is needed to separate and wash the material, which is then granulated and reused in a similar range of applications to the primary plastic product. Converting can be done by recycling the waste plastics using different methods including mechanical methods like shredding and extrusion. Recycling is possible if effective technology is developed and used. In view of [3] plastic shredders are an important parts(devices) of the plastic recycling process, and can be designed to process plastic products of a wide variety of sizes and configurations. Shredders are the common machines used to cut plastics in to small sizes as a result of which plastics will be re-melt and changed in the require product as per the design. Various designs and sizes of plastic shredders are available, but are not suited to small scale and middle level industries and most are not movable due to their size and mechanism as well as they are costly. To alleviate the problem compacted, easily manufactured, maintainable, shredder machine with high production rate and minimum cost must be developed.

The objective of this project is therefore to develop a dual shaft multi bladed compacted electrically driven waste plastic shredder with high production rate and low cost for the purpose of recycling waste plastics thrown everywhere in the country as a result of which the plastics will be raw materials for further us and a green and clean environment can be created. This project has different advantages to individuals, small and medium scale enterprises (SMEs), society, and environment. In general this project has the following significances:-It creates job opportunity in the country; it reduces the volume of landfill waste plastic and will bring effective waste management, enhances technology transfer, uses as local recourses, helps as a source for academic research. To minimize problems, caused by these waste plastics, the plastics must be converted to raw materials and should be resources for other application. Shredder machine development is thus highly important and timely issue in this regard.

II. MATERIALS AND METHOD

A. Material

According to [9], the selection of a material for any project is one of the most important decisions the engineer/ designer have to make. Poor material selection can lead to failure of a part, system or to unnecessary cost. The process of materials selection typically involves multiple conflicting material characteristics as well as large number of constraints. As underlined in work of [8], material selection passes through systematic and optimizing approach. In selecting the materials used for constructing the project mechanical properties of materials including strength, hardness and impact resistance were considered. Weighting measure was also used to prioritize on what materials are more important than others after which all available materials were listed and ranked for ranking purposes, indicators like cost and availability of the various materials were computed.

Low carbon steel groups were preferable materials to manufacture the plastic shredder machine components in the form of square pipe, sheet metal, rectangular hollow steel, angular steel, round bar, plate, square bar and flat steel. Based on the property analysis low carbon steels SAE1025 and SAE1040 [17] with σ_{ut} = 362 NM/mm^2,σ_y=234NM/mm^2 , Brinell hardness of 120,density of 7.81g,cm^3 and cost of 4.75USD per kg and σ_{ut} = 414 NM/mm^2,σ_y=612NM/mm^2 , Brinell hardness of 248,density of 7.81g,cm^3 and cost of 5.57USDper kg respectively were candidate materials for manufacturing this machine.

B. Methodology

The methodology used was experimental .This method was selected to control and check variables and essential parameters while manufacturing and fabrication process takes place. Cutting speeds, depth of cut and feed rate of the machine were considered as essential variables and the dimensions obtained were the parameters controlled during machining. The force applied and the stress developed as well as bending moment was also controlled. The instrument for collecting the data was observationat Addis Ababa city administration environmental protection authority. Need assessment on the importance of the waste plastic shredding machine was carried out before the real development process and was fully encouraged to produce it. The procedure (method) followed was design of the machine components including materials selection, manufacturing of components with simple tools, equipment and machines, assembling of components and testing of the machines. Purposive sampling was used. This sampling method was selected for such experimental work because it restricts to stress only on the achievement of the designed machine with its full parameters required for the designed work. The sample size of the final waste plastic shredder machine is height 1227mm, length 854mm, 700mm width) speed of 65 rpm ,Electric gear motor 2Hp,Production rate is about 11 kg plastic per hr. This size made the shredder machine ergonomically comfortable and easy to operate by single operator.

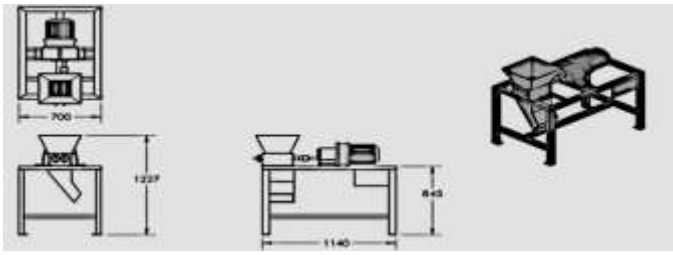

Fig.1.Sample of shredder machine

III. DESIGN ANALYSIS

C. Materials selection and design analysis ofmachine components

Author [10] explained that design is a communication-intensive activity in which both words and pictures are used, and written and oral forms are employed.

Material selection [11] is a primary step in the process of designing any engineering product. In the context of product design, the main goal of material selection is to minimize cost while meeting the needed requirement and product performance and goals. Systematic selection of the best material for a given application begins with properties and costs of selected materials. The selection of materials and the processes used in fabrication are integral parts of the design of a machine component. Shaft, coupling, key, blade, gear, materials wear selected using weightage factor. Shearstress, normal stress and bending moment were analyzed. There are more than 40,000 currently useful metallic alloys and probably close to that number of nonmetallic engineering materials [11] such as plastics, ceramics and glasses, composite materials, and semiconductors.

As the number of materials is large selection for a given component is a difficult task. A variety of quantitative selection procedures have been developed to analyze the large amount of data involved in the selection process so that a systematic evaluation was carried out. After selecting the materials and determining the method, design of components were done. Commonly mechanical behaviors, physical properties, chemical properties and process ability (technological properties) are the key issues to be considered in materials selection. Accordingly AISI No.1020 hot rolled steel for shaft was selected with the parameters of:

Ultimate tensile strength =350Mpa,Yield strength =420Mpa, Power 1.5kw; Length of the shaft 340mm ,d=25mm(after analysis), Factor of safety's =3(Suddenly applied load with heavy shocks).

The diameter of the shaft (in terms of the minimum share stress) was determined using:-

$$\mathrm{Mt_e} = \frac{\pi}{16} \times \tau \times \mathrm{d}^3 \quad (1)$$

And (in terms of theory of maximum normal stress)

$$Mb_e = \frac{\pi}{16} \times \sigma_b \times d^3, (2)$$

Where M_{te} and Mb_e and bending moment of shear and normal stress of shaft respectively and determined by:

$$M_{te} = \frac{P \times 60}{2\pi N} \quad (3)$$

$$M_{be} = \frac{W \times L}{4}, \ (4)$$

Where P-force (N), N-number of revolution per minute, W-weight in N, and L-length of the shaft in mm.

Based on the analysis the force applied on the shaft and bending movement was calculated using the known formulas and the results are displayed in fig.2 and 3 below.

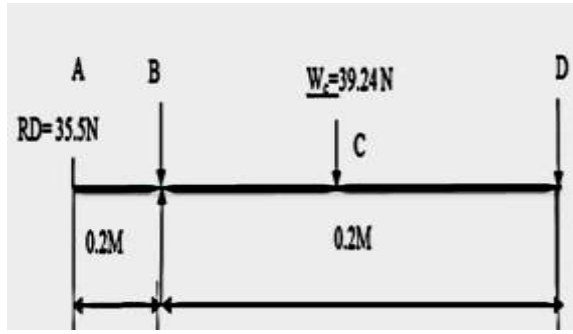

Fig.2. Forces on shredder shaft

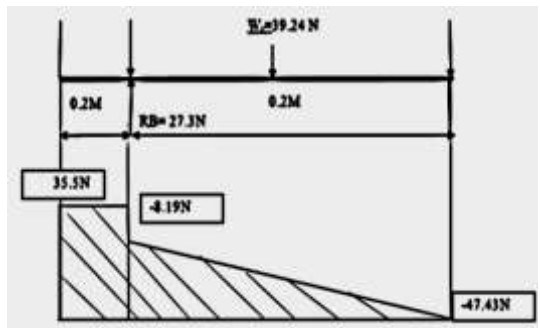

Fig.3. Bending moment diagram of shaft

The shaft selected was the solid shaft combined shock and fatigue factor for bending (K_b= 2) and torsion (K_t=1.5),the maximum bending moment was M_b = 6352.9N-mm^2, the allowable shear stress of the materials was140 N/mm^2 and allowable bending stress was116.6N/mm^2. Based on the obtained values, diameter of the shaft was calculated by maximum normal stress and maximum shear stress methods (equations 1and 2 above).Accordingly the optimum diameter of the shaft was 25mm.For such shaft couplings, keys, bolts were analyzed and selected, carbon steel AISI 1080 with maximum shear stress = 518400N/mm^2 was the selected material for these components.

After analysis tool steel ASIS L-2 was the best steel selected for blades. Shredder blade design with its dimension is displayed in fig. 4.

Ballbearing basic number 6205 bore = 25mm, outer diameter = 52mm, and width = 15mm was selected (ball bearings are used for light loads and the roller bearings are used for heavier loads).As practice showsspur gears are the most common type, which transmit power or motion between parallel shafts or between a shaft and a rack. They are simple in design and measurement. For this work the shafts are parallel and rotate slowly and no significant noise. A gear mechanism is used while small centre distance of shafts are required and to obtain definite velocity ratio comparing with belt mechanism .So a spur gear was selected for this machine. Medium carbon steel45 was used for the gear; number of gear teeth 20 and

pitch distance 70mm was selected.The shredder was manufactured using milling machine and was the complex task. The manufactured baled was a modified to angle of cutting $56^0$and better in accuracy comparing to that found in the market.

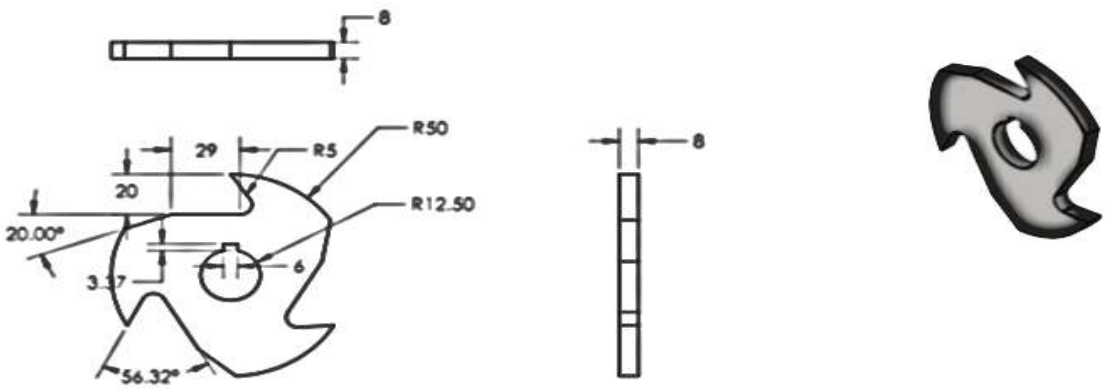

Fig.4.Design of shredder blade

IV. MANUFACTURING PROCESS

As explained in [12], manufacturing process is the production process which is directly concerned with the change of form or dimensions of the part being produced. It does not include the transportation, handling or storage of parts, as they are not directly concerned with the changes into the form or dimensions of the part produced. The drawing for a component is given along with a basic product design specification (PDS). The drawing and other available data was analysed and interpreted. This forms the basis for the material evaluation and the subsequent selection of manufacturing processes, machines, tooling, work holding devices and the setting of appropriate processing parameters.

Documenting all of the decisions with regards to how the component is to be made is the next step. All of the above information was used to produce a detailed routing sheet for the product.Accordingly the total components of the machine was produced and fabricated by machiningprocess, weldingprocess, sheet metal forming, and hand working like filing, sawing and hand threading (fabrication and manufacturing). For machining the components the following known parameters were set and operation was performed accordingly.

Cutting speed $V_c = \Pi dn/1000$, (5)

Where d is diameter of the work piece in mm and n is number of revolution of the machine revolution per minute

$t = (D-d/2)$ (6)

Where D- initial diameter of the work piece, mm and d is final diameter of the work piece inmm, tis depth of cut inmm.

$$\tau = \frac{1}{s \times n} \quad (7)$$

Where τ- Machining Time for a Complete Cut , minute

l = length of job to be cut in mm,

s = feed in mm / revolution, and

n = rpm (revolution per minute).

In general the low cutting speeds and higher feedswas used for roughing cuts and vice versa for finishing cuts. All parameter calculations were made on the basis that carbide tooling is being used in line with the general recommendation.After manufacturing all the components of the machine assembling was done.

V. ASSEMBLY AND MAINTENANCE

A. Assembly

The machine contains eight major parts to be assembled: hopper, shredder case, cutting blade, shafts, spacers, gears, frame, and gear motor.While assembling the components of the machine the rule of assembling was applied and, sub assembling was done following the procedure of frame, shredder head box, cutting blades with shaft and inlet hopper with appropriate joining method. This minimizes the difficulty of assembly of all parts. Having those sub-assemblies, final step was to assemble all the sub-assemblies into single fully assembled shredder machine. In the process of assembling different assembling tools and equipment were used. Steps of assembly are displayed in fig.5-10. The assembling of parts was made to be as easy as possible for maintenance and repairing. As a result the critical parts of the machine were assembledusing temporary fasteners(bolt and nut) and the parts needed to be ridged were joined by welding. After the assembling of every physical component electrical connection was done with three phase breaker system .The machine has over load and start & stop push button for better safety.

Fig.5. Blades, spacers and shafts assembling

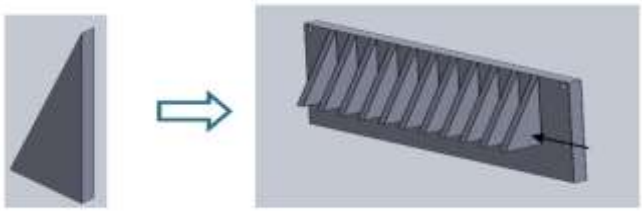

Fig.6.Side will joining to form shredder box

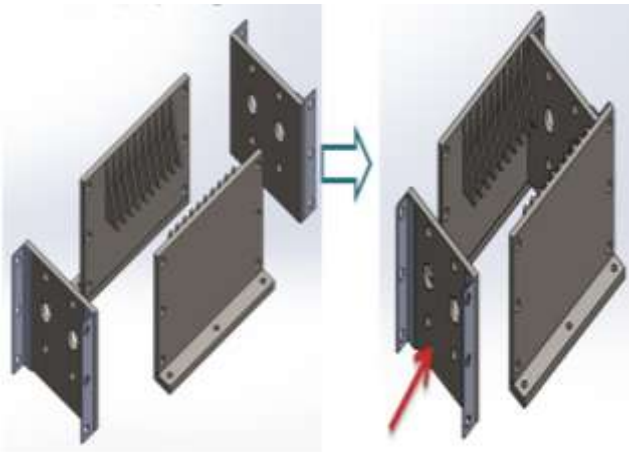

Fig.7. Assemble the ribs

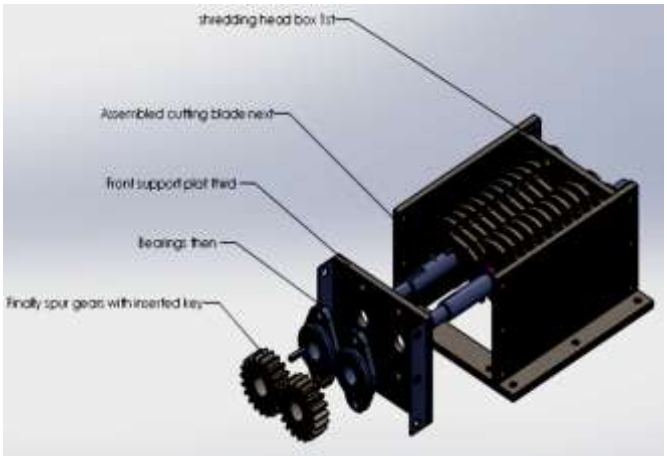

Fig.8. Fix cutting blades ,bearing, gears with shredding box

The working mechanism of the machine is asfollows: The gear motor is fixed on the rigid frame (1).When the switch is on, the cutting blades are stared to rotate (2).The motion transferred to the main shaft by the support of attached coupling (3).The presence of bearing also reduces friction over the shaft (4). In the main box there are 18 blades fixedto the two rotating shaft and rotates in opposite direction to each other with the driving spur gear (5).Feeding the waste plastic to the shredding box is done through the hoper (6).Finally the plastic is crushed by the rotating blades and delivered to the receiver through outlet for further process. See Fig.1.

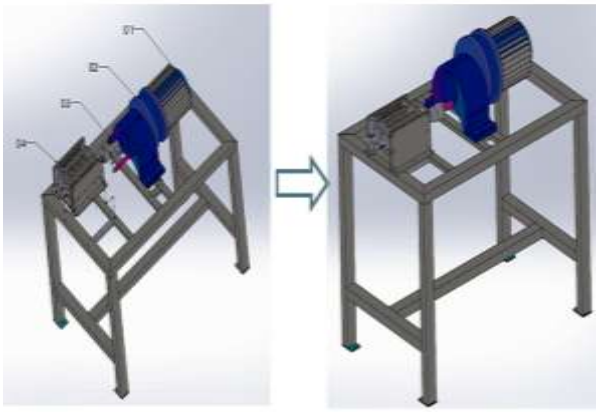

Fig.9. Assemble gear motor and shedder head box, with the frame

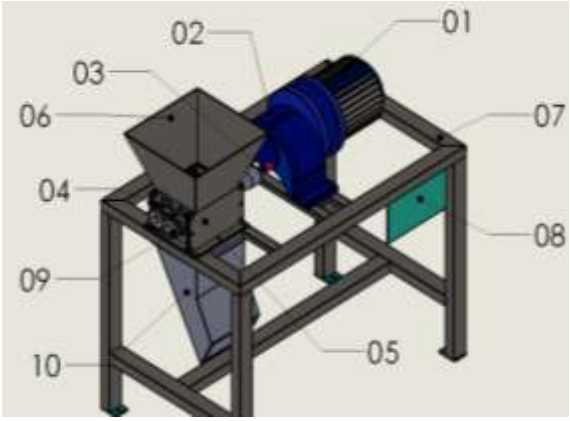

Fig.10. Finally assembled hoper ,outlet and electric power switch box on the frame

VI. MAINTENANCE AND MAINTENANCE SCHEDULING FOR THE MACHINE

The newly developed plastic shredder machine does not need complex and frequent maintenance. It is because the load applied is light and the motion of the machine is slow. However selecting maintenance type and preparing maintenance scheduling is essential to make the machine to give proper service for long time.

The general consideration about maintenance as underlined in [13] is that machines are subject to deterioration due to their long service and exposure to environmental conditions. Process of deterioration, if unchecked, culminates in rendering them unserviceable and brings them to a standstill. Therefore, it is necessary to attend to them from time to time, to repair and recondition so as to elongate their life. Inspection (both

internal and external) is an essential function of the maintenance program.

Mechanical components like gears, bearings, moving parts and other friction surfaces etc. give good performance for long periods, when they are systematically lubricated. For lubrication, a lubrication schedule should be prepared and should be followed strictly. Routine maintenance, like cleaning or lubrication, is required to ensure the blade and the gears are operated properly. Cleaning is a prime important activity in maintenance because cleaning removes the source of contaminations.

The machine works due to the mechanically driven motion of the cutting blades and those blades rotate with the necessary torque for cutting action. Shafts, blades bearings and gears are simultaneously rotate and are subjected to some loads and frictions. Having that in mind, necessary periodic maintenance should be applied to each member depending on the nature of load applied to it. Accordingly the following critical machine parts need preventive and scheduled maintenance since these parts are commonly subjected to loads and frictions.

The parts are: cutting blades, Bearings, Spacers, Gears andMotor Gear box. Before operating the machine, fasteners tightness and level of gear motor oil should always be cheeked. For this machine a preventive maintenance scheduling was prepared and displayed in table (1).

Table1.Preventive maintenance schedule for waste plastic shredder machine

No.	Activities (detail of work)	Frequency	Estimated time	Comment
1	ELECTRICAL			
1.1	Check operation of start/stop switch.	5 weeks	30 minutes	
2	MECHANICAL			
2.1	Transmission gear check up	2 weeks	1hrs	
2.2	Lubrication system checkup for bearings	1 weeks	1hrs	
2.3	Lubrication system checkup for bushings	3 days	30 minutes	
2.4	Check up for belt tension	2weeks	20 minutes	
2.5	check up for chopping knives	1 week	1hr	
2.6	check up for beating hammers	2weeks	2hrs	
2.7	check up for loosened bolts and nuts	4days	1hr	

VII. COST OF THE MACHINE

As indicated in [14], cost is perhaps the most influential factor in the outcome of a product or service within numbers of today's industries. Companies are increasingly required to improve their quality, flexibility, product variety, and novelty while consistently maintaining or reducing their costs. In short, customers expect higher quality at an ever-decreasing cost. Not surprisingly, cost reduction initiatives are essential within today's highly competitive market place. The cost analysis is used to determine the overall costs of the machine after manufacturing of each component.

The total cost of the multibladed machine was determined by analyzing the costs of raw materials and the cost of standard items, operation process cost, costs of power consumption and consumable materials, labor cost and machine depreciation cost together with other unexpected expenses. In the view of [14], cost estimation analysis is detailed estimation of the actual cost of manufacturing parts, equipment's, and machineries to determine the optimum cost of the manufacturing firms. Cost consideration is a basic issue in manufacturing sector in order to make the enterprises competent in local and global market in terms of providing goods with low cost and good quality. In this regard cost analysis of developed shredder was carried out.

Based on the analysis of different cost elements the cost for this machine development was calculated as follow:-

1. Material cost(Mc) = **150.34USD**
2. Standard item cost=**821.96USD**
3. Labor cost(Lc) = **252.34USD**
4. Machine depressions cost(Dc) = **0.22USD**
5. Electric consumption cost (Ec) = **05925USD**
6. Total material cost = material cost +standard item cost = 150.34 + 821.96=**972.30USD**
7. Others = Mc X10% = 972.30X .1 = **97.23USD**
8. Production cost = Tmc + Lc + Mdc + Ec + others= (972.30+234.34+0.22+059+97.23) = **1304.68USD**
9. Selling profit 10% of pc =10%X 1304.68= **130.468USD**
10. Selling price =pc+ selling profit =1304.68+130.468=**1435.148USD**

Therefore the total selling cost of this project is not so big and is affordable and effective comparing to the service hat can be obtained from the machine.

VIII. TESTING THE MACHINE

The cutting performance of the machine was tested while it rotates at 65 revolutions per minute and waste plastic materials were added or feed to the shredder box through the hopper and the machine shredded into small size pieces (approximately 8-10mm). Nine blades with three cutting edges were assembled on each shaft and each cutting edge touches the plastic to be shred three times in one minute that is totally 27 times shredding action was done in one minute and the shredded plastics pieceswere collectedthrough the outlet to the delivering pan.

In testing the coupling connection mechanism of the geared shafts, the cutting blade free load rotation, stability of the machine, revolution per minute of the cutting blades and free clearance rotation of the cutting blades were checked and was good in condition. The total plastic piece shredded in 1 hr. was weighed and was about 11 kg.

In this case the developed machine can be used as one alternative means to alleviate the problem of land fill pollution by waste plastic items that ultimately leads to reduction of foreign currency expenses used for the provision of new plastic shredder machines from abroad.

IX.CONCLUSION

Waste plastic items thrown in land and sewerages in Ethiopia both in the rural and urban area affects the environment, causes pollution and land fill. Sewerages are blocked by plastic pieces. To minimize the problem caused by these waste plastic remnants developing shredder machine was considered as alternative means and a newly modified dual shaft multi bladed shredder was developed. To develop this machine selection of materials, design analysis and manufacturing of components were done.

Assembling of the machine and testing its performance showed that the machine is effective and can produce 11kg of plastic pieces per hour. It was recognized that the size of the plastic pieces can be minimized or maximized by changing the size of spacer and cutting blade.

Production rate can also be increased by increasing the number of blades, which at the same time increase the size of the machine.

Taking the above in to account it is possible to conclude that the production of such machine is timely important to create green land, city and urban areas and to recycle these plastics for further use as a raw material. It is also possible to draw such conclusion that the machine was manufactured from local materials, easy to assemble and disassemble, does not need highly skilled man for operation, convenient for transportation, affordable and cost effective, easy to maintain, environmentally friend and, creates job opportunity in the country if used by users..

In the future more modification is expected in order to improve its productivity.

REFERENCES

[1]. Rosen, R.L.(1993). Fundamental Principles of Polymeric Materials, 2nd edition,New York, John Wiley &Sons,.

[2]. Leidner, J.(1981). Plastics Waste: Recovery of Economic Value, volume I,New York, Marcel Dekker, Inc,

[3]. Asst prof. S.Nithyananth, Libin Samuel et al,(2014).“Design of Waste Shredder Machine”, Int. Journal of Engineering Research and Applications, Vol. 4, Issue 3(Version 1).

[4]. I.M. Sanjay Kumar,(2015).Design and Development of Agricultural Waste Shredder Machine , International Journal of Innovative Science, Engineering& Technology, Vol. 2 Issue 10.

[5]. S.Nithyananth,(2014). “ Design of Waste Shredder Machine” Libin Samuel et al Int. Journal of Engineering Research and Applications Vol. 4, Volume II,

[6]. Igbinomwanhia, D.I.(2001). Status of Waste Management, Integrated Waste Management. (2001) (78-85).

[7]. Lynch, J. and Nauman, E.,(1989) .Separation of Commingled Plastics by Selective Dissolution”, Proceedings of Society of Plastics Engineers,North Carolina, RETEC.

[8]. Rosen, R.L.(2001). Fundamental Principles of Polymeric Materials, 3rd edit.,New York, John Wiley &Sons

[9]. Robert L .Mott, RE,(2004). Machine elements in Mechanical Design, John Wiley & Sons, Inc

[10]. J.EShigley and C.R Mischke, (1989). Mechanical Engineering Design, McGraw Hill Publication

[11]. MichaelF.Ash, (2005). Materials Selection, 3rdEdition,New Delhi,McGraw-hill

[12]. Mikell P. Groover, (2010). Fundamentals of Modern Manufacturing, Lehigh University,4thEdition,USA

[13]. Lindleyr.HigginsR.KeithMobeley, Maintenance engineering hand book, six Edition,New York,McGraw-hill

[14]. WIERDA, L. S. 1991. Linking design, process planning and cost information by feature-based modelling,, Journal of Engineering Design