Cryptocurrency Price Prediction Using Long-Short Term Memory Model

Prashanth J R[1], Vineetha S Das[2]

[1]*Research Scholar, Department of Mechanical Engineering*
APJ Abdul Kalam Technological University, College of Engineering Trivandrum, Kerala, India
[2]*Associate Professor, Department of Mechanical Engineering*
APJ Abdul Kalam Technological University, College of Engineering Trivandrum, Kerala, India

Abstract- **Cryptocurrency, is a decentralized digital or virtual currency. Use of cryptography for security makes it difficult to counterfeit. The primary cryptocurrency, the Bitcoin was launched in the year 2009 by Satoshi Nakamoto. Bitcoin, Ethereum, Ripple, Bitcoin cash, Bit connect, Dash, Ethereum Classic, Iota, Litecoin, Monero, Nem, Neo, Numeraire, Stratis, Waves etc. are some of the popular Cryptocurrencies. Cryptocurrencies started to gain attention in 2013 and since then witnessed a significant number of transactions and hence price fluctuations. The cryptocurrency market is just similar to stock market. It has gained public attention and so effective prediction of price movement of cryptocurrency will aid public to invest profitably in the system. This paper tries to predict the price of Cryptocurrencies. Machine learning techniques were implemented and the use of Adam optimizer and Long Short Term Memory (LSTM) network proved very efficient in predicting the prices of digital currencies.**

Keywords: **Cryptocurrency, price prediction, Machine Learning, Adam optimizer, LSTM**

I. INTRODUCTION

Cryptocurrency, a technology supported virtual currency, is not issued by Government agency. It has highly volatile market price. The market capitalization of publicly traded cryptocurrencies is currently above $230 billion[1]. The digital currency came to existence with the introduction of Bitcoin in 2013. The cryptocurrency is not regulated by government agency. Peer-to-peer network of individuals process the transactions using internet. A block chain controls digital transactions [2]. Ethereum has the second-highest market capitalization and supports much more functionality than Bitcoin[1]. The Cryptocurrency market works similar to a stock market. Effective prediction of time series using conventional and various emerging techniques like machine learning enabled the market participants to earn promising rewards from stock markets. Application of such techniques to the market of Cryptocurrencies can help the investors to take advantage of liquidity of the system and thus gain substantial profit [3]. Cryptocurrency market is also highly volatile [4] and hence provides room for effective prediction. Traditional time series prediction assumes linearity of data and is to be segregated in to trend and seasonal components. The cryptocurrencies are highly volatile and lack seasonality. Hence traditional time series models won't give smart predictions in the world of digital currencies. As the task is complex, deep learning provides an interesting tool for the purpose.

This paper investigates the effectiveness of machine learning in predicting the price of cryptocurrencies. The next section deals with the literature relating to the topic, followed by data used in analysis, methodology adopted, results and discussions and concluding remarks.

A. Literature Review

Madan et al. (2015)from Stanford used different machine learning techniques to predict the sign of daily price change of Bitcoin based on data about Bitcoin blockchain network. The data includes average confirmation time, block size, hash rate, etc. They reported an accuracy of 98.7% for their model. Another group of Stanford researchers, Greaves et al. (2015) performed similar analysis, and got a classification (sign of hourly price change) accuracy of 55%. Matta et al. (2015) predicted the bitcoin spread by analyzing the relationship between price, trend views and tweets. The results shows moderate price and the other parameters. Jang et al. (2017) performed a time series analysis of Bitcoin to explain volatility of prices they used Bayesian neural network in combination with linear and non- linear benchmark models for the purpose. Chen et al. (2017) assessed multiple models for predicting the change in direction of Ether price. Most of these models were based on binomial classification algorithms, including Logistic Regression, Support Vector Machine, Random Forest and Naive Bayes. They also implemented and tested models based on recurrent neural network (RNN) and Neural Network (NN). A positive correlation exists between the experts opinion propagated through search engines and the Bitcoin prices. The hash rate is positively correlated with the price of the digital currency so also the mining difficulty Kristoufek (2015). He considered the long term price performance and used wavelet coherence analysis for the purpose. The authors finds the tool much effective in exploring cross –correlations when the time series has temporal dimensions this makes the tool effective in finding the correlations at discrete points of time.

B. Data and Methodology

There are lot of cryptocurrencies in the market and in this paper the following cryptocurrencies are selected for study and price prediction, Bitcoin, Ethereum, Ripple, Monero, Litecoin and Dash. The historical data required for price prediction of cryptocurrencies are collected from https://coinmarketcap.com. The methodology of the work consists of several steps data collection, data processing, feature extraction, training Long Short – Term Memory network and predictions using the trained network. The pre-processing involves data reduction, data normalization and data cleaning to get the required dataset. Then it is divided into test dataset and train dataset. Feature extraction selects the features that are to be fed to the LSTM network. In the current case it includes opening, high, low and closing price. Training of LSTM network involves feeding the neural network with data and training the same. The prediction involves assigning random biases and weights. The proposed LSTM model is composed of a sequential input layer an LSTM layer and a dense output layer with linear activation function. The prediction from the model is taken and the mean absolute error is used to ascertain its effectiveness.

C. Long Short Term Memory

Long Short-Term Memory (LSTM) networks are a class of recurrent neural networks where the neurons in the hidden layers are replaced by the memory cells. It effectively reduces the vanishing gradients problem associated with standard Recurrent Neural Network (RNN) when long term dependencies are involved. In the standard RNN, there is repeating modules formed by series of simple hidden networks, like single tanh layer. LSTM has a hidden layer which is more complicated than standard RNN.

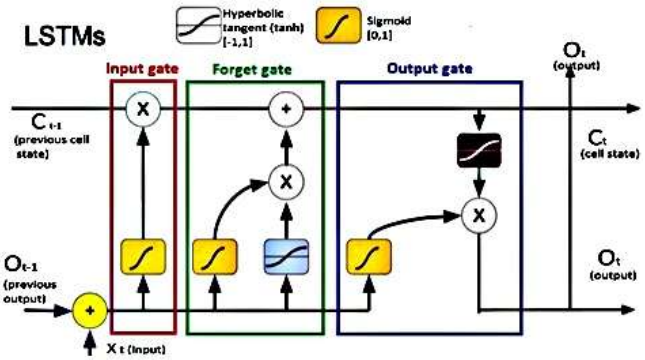

Figure 1: An LSTM memory cell

II. RESULTS AND DISCUSSION

The proposed LSTM model for the price prediction of digital currencies was trained and the predictions were carried out for popular cryptocurrencies. The accuracy of the proposed LSTM model prediction is investigated by finding mean absolute error (MAE) which is the average of all absolute errors (E).

$$\mathrm{E} = (\mathrm{X\ predicted}) - (\mathrm{X\ actual})$$

$$MAE = \sum_{I=1}^{n} |(\mathrm{X\ predicted})\mathrm{i} - (\mathrm{X\ actual})\mathrm{i}|$$

Where, n = the number of errors,

$|(\mathrm{X\ predicted})\mathrm{i} - (\mathrm{X\ actual})\mathrm{i}|$ = the absolute errors.

Table 1 depicts the comparison of the LSTM model predictions with their true values. The MAE obtained proves that the model is capable of effectively managing the complex behavior of the time series.

COINS	Mean Absolute Error (MAE)	
	TRAINING SET	TEST SET
Bitcoin	0.0258	0.0386
Ethereum	0.0489	0.0512
Monero	0.0540	0.0612
Ripple	0.0466	0.0586
Litecoin	0.0400	0.0455
Dash	0.0456	0.0475

Table 1. Experimental Results

Figure 2 shows the Training and Test set predictions of Bitcoin and Ethereum in which panel 1 shows actual and predicted prices of Bitcoin training data set and panel 2 shows prices of Bitcoin test data set. Similarly, panel 3 is the actual and predicted prices of Ethereum training data set and panel 4, the actual and predicted prices of Ethereum test data set. From the graphs it is clear that the proposed LSTM model predicts the prices of digital currencies effectively.

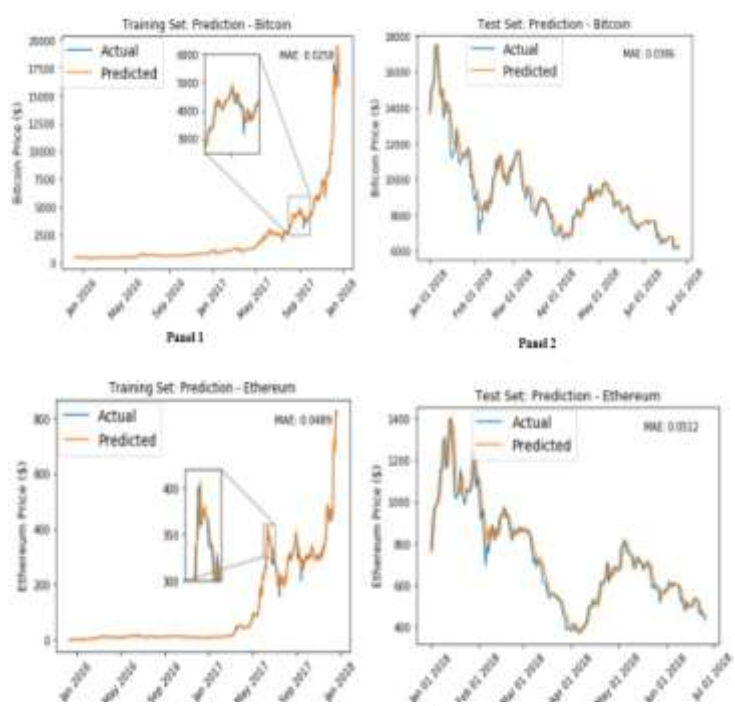

Figure 2. Training and Test set predictions of Bitcoin and Ethereum

III. CONCLUSIONS

The work focused on predicting the future price of some of the major Cryptocurrencies. Six major currencies, with larger market capitalization, are selected for price prediction. The open, high, low and close price historical data of currencies are collected. The closing price of train data set is normalized and fed to the LSTM input and the LSTM model is trained and the future price is predicted and validated. LSTM model has predicted Bitcoin price with high accuracy (error of 0.038 only) compared to other digital counterparts. It is observed that the LSTM model predictions very close to the actuals. Also, the prediction error is less, which denotes a good fit. This proves that the proposed LSTM model effective in predicting the prices of the digital currencies. By consolidating different prediction techniques the accuracy of prediction can be improved along with broadening the predictions horizon.

ACKNOWLEDGMENT

Authors are thankful tothe faculty at College of Engineering, Trivandrum for guidance and technical support.

REFERENCES

[1]. M. Chen, N. Narwal, and M. Schultz, “Predicting Price Changes in Ethereum,” no. 2016, pp. 1–6, 2017.

[2]. T. Guo and N. Antulov-Fantulin, “Predicting short-term Bitcoin price fluctuations from buy and sell orders,” 2018.

[3]. I. Madan, S. Saluja, and A. Zhao, “Automated Bitcoin Trading via Machine Learning Algorithms,” *URL http//cs229. stanford. edu/proj2014/Isaac\% 20Madan*, vol. 20, pp. 1–5, 2015.

[4]. M. Brière, K. Oosterlinck, and A. Szafarz, “Virtual currency, tangible return: Portfolio diversification with bitcoin,” *J. Asset Manag.*, vol. 16, no. 6, pp. 365–373, 2015.

[5]. A. Greaves and B. Au, “Using the Bitcoin Transaction Graph to Predict the Price of Bitcoin,” 2015.

[6]. M. Matta, I. Lunesu, and M. Marchesi, “Bitcoin Spread Prediction Using Social And Web Search Media,” *UMAP Work. 2015*, 2015.

[7]. H. Jang and J. Lee, “An Empirical Study on Modeling and Prediction of Bitcoin Prices with Bayesian Neural Networks Based on Blockchain Information,” *IEEE Access*, vol. PP, no. 99, p. 1, 2017.

[8]. L. Kristoufek, “What are the main drivers of the bitcoin price? Evidence from wavelet coherence analysis,” *PLoS One*, vol. 10, no. 4, pp. 1–15, 2015.