A Cloud Based Natural Hazard Detection and Warning System

Nishanth A,Vanmathi C

School of Information Technology and Engineering, Vellore Institute of Technology, India

***Abstract* - Though there are several advancements in technology, only a very few of them are concentrated on predicting and detecting natural disasters such as Earthquake, Tsunami and etc. But using technology in these areas would save lives by warning people about the disaster at an earlier time and will be very helpful. The existing methodologies are capable of detecting and measuring the intensity of disasters during the time of happening. A conclusion can be derived that it fails to warn people at the right time and the recordings were just used for statistical purposes. On the other hand, if a system is developed for the same; it is not recognized and not implemented in real time due to lack of awareness and other reasons such as the cost of installation, etc. Hence, theobjective is to come up with a cost effective device which can detect natural disasters and should be implementable at any remote area.**

***Keywords*— earthquake detection, warning system, arduino, mobile alert, firebase cloud**

I.INTRODUCTION

The Global Seismic Hazard Assessment Program states that more than fifty countries of the world are very prone to earthquakes or tsunami in case if it's surrounded by water bodies. Developed nations such as Mexico, Japan still face life loss during every disaster. If there exists an early warning system, those lives could be saved.

Even if the much prone countries are prepared for causalities, nature becomes unpredictable and countries with no history of disasters can also face one. The regular intuition of people is tolook for shelter or keep running for their lives instead of accomplishing something perplexing like turning off circuit breakers or killing gas valves during the crisis. And, this device shows the plan and usage of a mechanized seismic tremor discovery framework that cautions individuals at the opportune time.

Apart from earthquakes and tsunami, the proposed device also works as a flood alert system. Flash floods are common in places situated in and around river beds. Heavy rain fall causes it and affects urban areas drastically. People get stranded inside buildings and the essential supplies like electricity, food gets cut down totally. Installing a device away from their houses for a perimeter can detect floods and buy them time to evacuate or save their valuables.

An accelerometer is used for detecting earthquake and tsunami. Since the device is highly sensitive and can raise false alarms most of the times, threshold range can be defined and set according to our convenience and at the same time not compromising on results.

The main scope of this device is to send alerts to people in advance to any disaster. It uses a Wi-Fi module which needs internet and sends data to Firebase, an online data storage service. Later the data can be retrieved via the app installed on android phones.

II. REVIEW OF LITERATURE

The survey conducted in *[1]* on earthquake detection techniques and its efficiencies reveals the informationthat is predicting an earthquake in advance is not possible but can only be detected before a five minute window. Almost most of the earthquakes fall under 3-6 small scale which doesn't cause any life damage. Earthquakes with values less than 3 in Richter scale are considered to be danger less and usually goes unnoticed by people. These small scale quakes last for a very short time. And those with 6+ Richter scale measurement causes both life and property damages. The author concludes by saying that losses can be avoided to some extent if a properwarning system reaches out to vulnerable people at the right time.

CholatipYawut and SathapathKilaso *[2]* have developed a system which they use to monitor weather and disasters. A weather station needs to be set up wherever needed and the collected information is analyzed using decision tree techniques and disaster alerts will be announced accordingly. They also have the provision to set up multiple weather stations and to gather information from all those stations. A wireless network model using zigbee is constructed to achieve the same. The connection range of a zigbee model is between 0 to 100 meters based on the power consumed by it, making it impossible to connect with devices that are located far away.

A feasibility studywas done by a group of 10 people in Italy on an "Earthquake early warning system" *[3]* which they abbreviate as EEWS, using schools as specific targets and presented the results to us. This device is also built on Arduino, a simple micro controller which detects earthquakes and sends messages to teachers and students of selected schools. They have also practiced drills on what to do when they receive a message about the disaster.

The platform is called Prest-o-plus, which sends messages within 5 to 10 seconds of the earthquake occurrence. A Bayesian network is used later on to find the intensity of the quake and is indicated by green, yellow and red LEDs.

Tsair-Chun Liang and et al. *[4]* have proposed a prototype which is the fusion of traditional methods and technology. A pendulum bob acts as the main component which is accompanied by four optical fibres, a tilt sensor and an arduino microcontroller. Many building architecturesfollow this pendulum model. On the event of shakings, the pendulum bob suspended by a spring hits any one of the four optical fibres which in turn, turns on the tilt sensor and information is sent to any remote device using arduino. The drawback with this system is that they use a spring to hang the pendulum which may wear off over a long period of time and also requires time to settle down after any vibration.

Swapnil Sayan Saha and et al. discuss the importance of having a "microcontroller based earthquake detection system" *[5]* since their country is more prone to earth quakes. Not only that, but they also think about the chain reactions followed by any earth quake such as electrical line outburst, gas pipe leakage, etc. The system proposed by them shuts down all the electrical power stations and closes the gas connection valves in the incident of an earthquake or any natural disaster. Unlike other systems, they use Arduino mega. Gas sensor and earthquake sensor is connected and monitors the surrounding and sends messages to nearest mobiles using Bluetooth module.

Angela Saraò and et al.have conducted an experiment in a senior class at a high school with the motive of creating awareness about seismic activities among school students. *[6]* They used an ADXL345 accelerometer, an arduino board and an open source software to create a low cost seismometer that records strong local motion. Unlike ADXL335, the above used one is more advanced and complex to use. Any one communication protocol has to be used in order to get readings and do the calculations. The led connected to the circuit blinks according to the intensity of the seismic waves.

Students from Purdue University*[7]*has come up with a prototype that can be installed in tall buildings and to check real time seismic waves. They've brought in a lot of calculation factors which can be modified according to the structure of the buildings. The prototype is tested in different environments and on various levels of the building.

Supported by an Android app, the system is easy to use and shutting down the power, closing gas lines becomes easy with the app.

III. Overview of the Device

The proposed device uses cutting edge technology components such as a highly sensitive accelerometer ADXL345 which can record from -16g to +16g, where g is the standard unit of acceleration. While facts say that most of the earth quakes start with a mild tremor and severity increases later.

Those mild tremors are not felt by humans, therefore making them stay in the same place and putting themselves into a vulnerable condition. If the device can detect it and warn people about the disaster, it can buy them enough time to evacuate the place and take preventive steps.

The warning system can be accompanied by a LED and a buzzer but on a larger scale, can be replaced by siren alarms and speaker announcements. The diagram below explains the components and concepts involved in the device and it is open to modification.

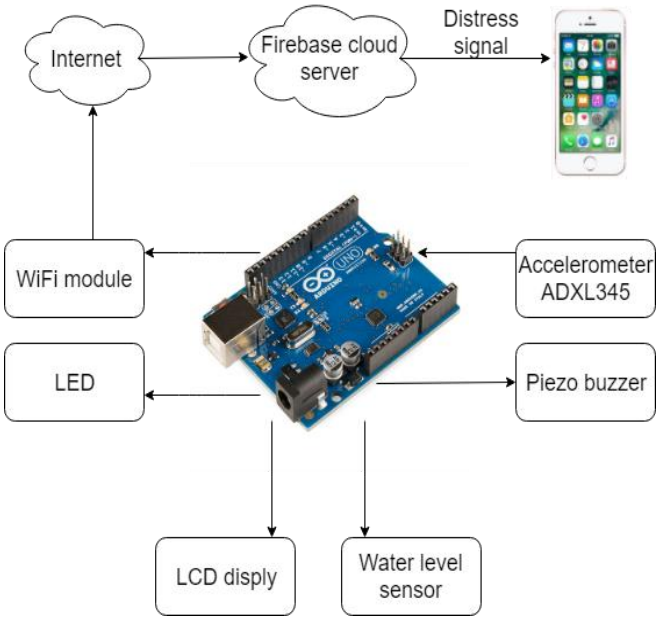

Fig 1: System architecture

As shown in the above diagram, the arduino micro controller is used as the main component which interacts with several sensors to find any unusual changes that can lead to a disaster. In that case, the warning system is triggered and sends a distress signal to user's mobiles. Here a high sensitive accelerometer is used to read horizontal, vertical and z-dimensional waves from the earth. The threshold level needs to be set either manually or by using pre-defined values, an alarm can be set off when readings exceed the threshold level. Technology has provided us with several options to proceed with the idea. For example, instead of an accelerometer there are several other devices which can do the same job. Tilt sensor, Vibration sensor are such devices which are capable of detecting faults in earth plate's movements. Either the combination of both can be used or a single accelerometer would do. And we have two variants named ADXL335 and ADXL345. The appropriate model can be used.

IV. Methodology

Monitoring of Earthquake and Tsunami: The highly sensitive ADXL345 accelerometer constantly examines the waves of earth and the recorded information is sent to arduino for computation. Both the components are connected via hard wire and have to be at the same place. The arduino compares the received recordings with the threshold parameters and

generates a distress signal in case if it exceeds. The distress signal can be in the form of LED and buzzer at the affected location and notification is sent to remote mobile devices.

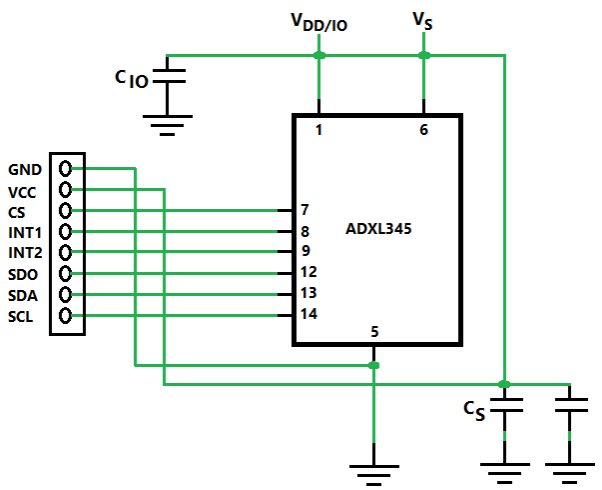

Fig 2: Accelerometer pins

Monitoring of flood: The moisture level sensor helps us in finding the level of water wherever installed. This component has to be installed away from the building such as parking, boundary and etc. Doing so will be useful in detecting the flood at a very earlier time and also helps in taking evasive action. Similar to accelerometer readings, threshold range can be defined for this too.

Warning system: In the case of an earthquake or other calamities, proper warnings have to be made such as glowing LED and beeping buzzer. While implementing on a larger scale, it can be replaced with siren alarms. Also distress signal is broadcasted to the internet and can be received by any number of people having the android app installed. The LCD attached to the arduino microcontroller displays the necessary details for monitoring. It displays whether the device is in monitoring mode or in distress mode, if the user feels that the threshold level set is too low, and then it can be changed accordingly with the switches provided.

Message to remotedevice: The Wi-Fi module attached with the device has to be connected to the internet via local routers or using mobile hotspots and will be sending data continuously to the Firebase cloud server. Later, the users having the android app can monitor the details like earthquake severity levels & flood alerts in real time by retrieving the data from cloud.

V. Working

Since the accelerometer is capable of detecting minute shakes which can be caused by movement of nearby heavy objects, the alarm might set off even when there's no real earthquake. This false alarm has to be removed by analysing 'g' values. The accelerometer values are read in raw format and therefore it has to be converted into an appropriate format for real time detection of the earthquake. The values have to be converted to 'g' and then later convert it into Richter scale equivalents. The device should read a value of 1g under still condition. We can decide that there's an earthquake or tsunami when the 'g' value drops below 0 or above 1.

$$g>0 \parallel g<1$$

The 'g' value has to be less than zero or greater than one for a real earthquake. Apart from the accelerometer installed, there's also a moisture sensor which is capable of sensing the water level. Installing this in the parking lot can help in detecting flash floods. The device also has a led and a buzzer which goes off when there's a disaster. The LCD display constantly shows the status of earth waves and moisture level present. For floods, the sensor is designed in such a way that it can detect water levels only on readings after 700. So the device will raise a flood alert only when the reading crosses 700 and it also should 900 at a rapid rate. By this we distinguish between real flash floods and avoiding false alarms which can easily be raised by leaky pipes, etc.

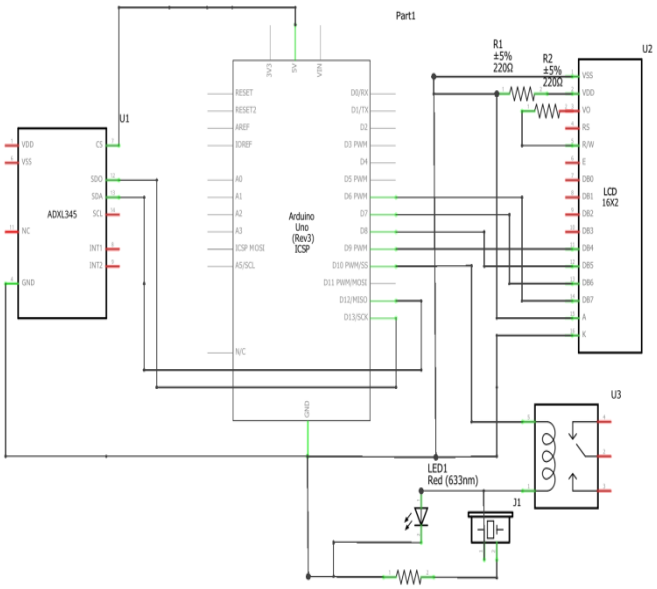

Fig 3: Circuit diagram

The device can be set up by installing the required components and the connections are to be made according to the circuit diagram shown above.

There is a relay connected to one end of the circuit which acts as a trip system. It is very common that electrical accidents occur on the event natural disasters. The electrical short circuiting may lead to a huge fire accident which takes lives additionally. But this trip system avoids that by cutting off power supply to the buildings from the main power grid.

VI. Applications

Some countries are very prone to specific disasters but still no preventive steps have been taken to reduce the physical damages and live loss. Using proper technology can inform people about the upcoming disaster, giving them enough time to evacuate the place and to take relevant precautionary actions. The underlying principle is to use an accelerometer for detecting abnormal changes on any surface. The device can detect earthquake when placed on any flat surface, the same can be used to detect tsunami with making some modifications to the device, setting up the right parameters or by adding any extra components if needed.

Since the device deals with vibrations, not only can be used to detect natural disasters but also for security purposes. ATM burglary has become common; burglars just dig up and take the whole machine. Installing this device with proper security specifications can avoid thievery. Sending message to police with the location of burglary is just another application of this device. Similarly, one can come use it in many fields.

VII. Results

The device takes the calibration values while getting started and those values are stored in the microcontroller. This value is not stored in anywhere else, doing so will make the data vulnerable and can be lost easily. If the calibration values gets corrupted, then the device itself fails in doing correct calculations but by storing it in the microcontroller, it remains safe and calculation gets easier. The threshold value shown in the picture is used for defining the range. i.e. if the calibrated value is 0 and threshold is 26, then the device stays in monitoring mode for the values from -26 to +25.The device generates a distress signal when these values exceeds their range.

Fig 3: Working of LCD display

When either of the values exceeds the predefined range, then the distress message will be displayed in the LCD display accompanied by Buzzer and Led.

Fig 4: Distress message in LCD

The values from accelerometer and water level sensor are fetched from arduino and are getting displayed in the serial monitor.

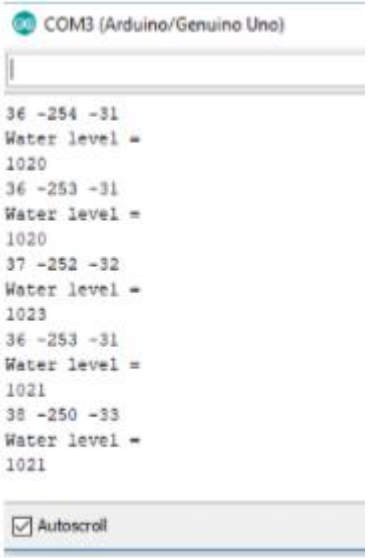

Fig 5: Accelerometer & water level sensor readings.

Google offers a tool named Firebase in which one can sign up and get data storage for free with certain restrictions. This tool comes handy for systems which need cloud storage space.

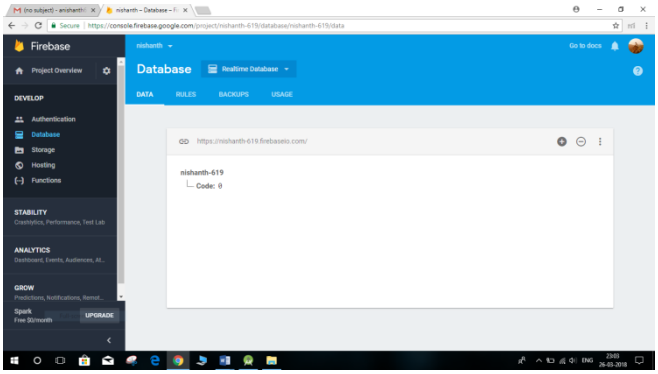

Fig 6: Google Firebase console showing real-time data

The hardware setup sends messages in codes which eases the process of retrieval. For example, Code 0(zero) stands for safe status, Code 1 for earthquake alert and so on. Based on satisfied conditions, the device sends code to Firebase.

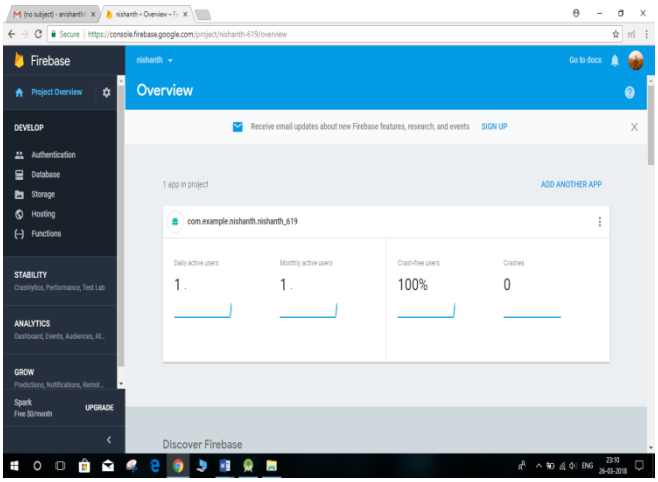

Fig 7: Firebase displaying no. of users and crash report

Firebase also lets you know about the number of users using the application and notifies when it reaches maximum number of users in the free trial.

Fig 8: Android application showing safe status

The screenshot attached displays safe status of the installed location. Now, this is remote monitoring and the users will be safe as long as they keep away from affected locations.

Fig 9: Android app showing warning status

The alert changes in real-time and does not need any refreshing of app or server. It goes back to the safe status automatically when any of the disaster is no more happening.

VIII. Conclusion

Microcontrollers like arduino are being used all around the world for different purposes. The results of this research show that technology can be used for life saving processes too. Since the device is cost efficient, it is slightly delicate and has to be handled with care. The proposed idea can be further extended by using other available sensors and methods to detect various natural calamities. This detection and warning system will definitely be of some great importance to people living in calamity prone areas.

References

[1] Takaki Iwata (2013). Daily Variation inEarthquake Detection Capability: A Quantitative Evaluation, Intechinwata license, http://dx.doi.org/10.5772/54890.

[2] CholatipYawut and SathapathKilaso (2011). A Wireless Sensor Network for Weather and Disaster Alarm Systems, International Conference on Information and Electronics Engineering IPCSIT vol.6 IACSIT Press, Singapore.

[3] Antonio Emolo, Matteo Picozzi, Gaetano Festa, Claudio Martino, SimonaColombelli, Alessandro Caruso, Luca Elia, Aldo Zollo, PieroBrondi, Nicola Miranda (2016). Earthquake early warning feasibility in the Campania region (southern Italy) and demonstration system for public school buildings, Springer Science + Business Media Dordrecht.

[4] Tsair-Chun Liang, Jia-Feng Ho, Po-Tsung Wu (2017). A wireless tilt sensor based on plastic optical fiber and Arduino board microcontroller. Springer-Verlag GmbH Germany, part of Springer Nature.

[5] SwapnilSayanSaha, Shekh Md. Mahmudul Islam, AninditaMashsharat (2016). Microcontroller Based Earthquake Detection System for Spontaneous Cut-off of Domestic Utility

Lines for Safety Measures, 9th International Conference on Electrical and Computer Engineering.

[6] Angela Saraò, Marco Clocchiatti, Carla Barnaba, and David Zuliani (2016). Using an Arduino Seismograph to Raise Awareness of Earthquake Hazard through a Multidisciplinary Approach, Seismological Research Letters Volume 87, and Number 1 January /February 2016.

[7] Zhuoxiong Sun, Shirley J. Dykea, Francisco Penab, Alana Wilbee (2017). Development of Arduino Based Wireless Control System, Sensors and Smart Structures Technologies for Civil, Mechanical, and Aerospace Systems.

[8] Gulbanu Buribayevaa, Taizo Miyachia, Azamat Yeshmukhametova, Yutaro Mikami. (2015) An Autonomous Emergency Warning System based on Cloud Servers and SNS. 19th International Conference on Knowledge Based and Intelligent Information and Engineering Systems. Elsevier, Science Direct.

[9] Mrs.Grace John, Athira P I, 3Sreedevi K (2015). Tsunami Detection system, International Journal of Computer Engineering In Research Trends, Volume 2, Issue 12, December-2015, pp. 1153-1157.

[10] V.Ramya, B.Palaniappan (2011). An Automated Tsunami Alert System, International Journal of Embedded Systems and Applications (IJESA) Vol.1, No.2, December.

[11] S. Stramondo a, C. Bignami b, M. Chini c, N. Pierdicca b and A. Tertulliani (2013). Satellite radar and optical remote sensing for earthquake damage detection: results from different case studies, International Journal of Remote Sensing Vol. 27, No. 20, 20 October 2006, 4433–4447.

[12] IrfanDwigunaSumitra, RongtaoHou, and Sri Supatmi (2017). Design and Deployment of Wireless Sensor Networks for Flood Detection in Indonesia, Springer International Publishing AG 2017 X. Sun et al. (Eds.): ICCCS 2017, Part I, LNCS 10602, pp. 313–325, 2017. https://doi.org/10.1007/978-3-319-68505-2_27.

[13] Elizabeth Basha, Daniela Rus (2007). Design of Early Warning Flood Detection Systems for Developing Countries, Computer Science and Artificial Intelligence Laboratory, Massachusetts Institute of Technology, Cambridge, MA 02139 USA, IEEE.

[14] Joy J. Labo, Eric E. Floresca, Larry E. Gracilla (2016). Development of Flood Warning System, Int. Journal of Engineering Research and Applications, ISSN: 2248-9622, Vol. 6, Issue 1, (Part - 6) January 2016, pp.57-64.

[15] Jirapon Sunkpho and Chaiwat Ootamakorn (2011). Real-time flood monitoring and warning system, Article in Songklanakarin Journal of Science and Technology.