Intelligent Book Finder using Radio Frequency Identification

Shubham Mishra[1], Shubham Pundir[2], Vaibhav Kumar Gupta[3], Vivek Kumar Singh[4], Ravi Kumar[5]

[1, 2, 3, 4]*Student, ECE, IMSEC, Ghaziabad, U.P, India*
[5]*Assistant Professor, ECE, IMSEC, Ghaziabad, U.P, India*

***Abstract*: - This project involves discovering a new way altogether for the identification of books and finding a lost book in a library. Today, what we use to keep the track of books is the old and outdated barcode technology, which generally involves providing each book with a unique barcode and then scanning all books one by one just to find that particular book. The new method suggested from the groundwork of our research is the usage of RFID technology for this tiresome and time taking job. The new method involves usage of electronic tags to store identification data and a wireless transmitter or reader to capture it. The results seen during the testing has been good and several organizations are mandating to use RFID to track asset.**

***Keywords*: Radio Frequency Identification (RFID), RFID tags, Prototypes, Educational institutes, Library**

I. INTRODUCTION

The purpose of this research is to replace an outdated technology having many faults and a high rate of failure due to either poor image quality or because of flawed data quality. Barcodes mainly fail because of poor shrink wrapping, poor print quality, violation of quiet zones and certain colour combinations.

We are replacing the barcode technology with a much efficient, much prominent, distinguished and illustrious technique of Radio Frequency Identification. RFID tagging is an identification system which uses small radio frequency identification devices for tracking purposes. This system involves the tag itself, a read/write device and a host system application for data collection, processing and transmission. A passive tag is briefly activated by the radio frequency scan of the reader. The electric current is small, just enough for transmission of an ID number. Active tags consist of more memory and can be read at greater ranges. Usage of this technology can bring radical changes in the field of identification and tracking but this is somewhat controversial because of tags getting cloned or used for illicit tracking.

II. METHODOLOGY

1. Every book in the library is packaged with an RFID tag which gives them a unique identity.
2. In reader module, we have operating frequency of 125Khz.
3. The tag antenna, under the effect of reader in range of 100mm, captures energy and transfers the tag's ID thus finding the book.
4. Also, while finding a book among a pile of books, we need to enter the unique ID of book (RFID tag of book) in reader.
5. If book is present in the area swept by the reader, buzzer will give signal.
6. Display of book's identification is done by LCD.

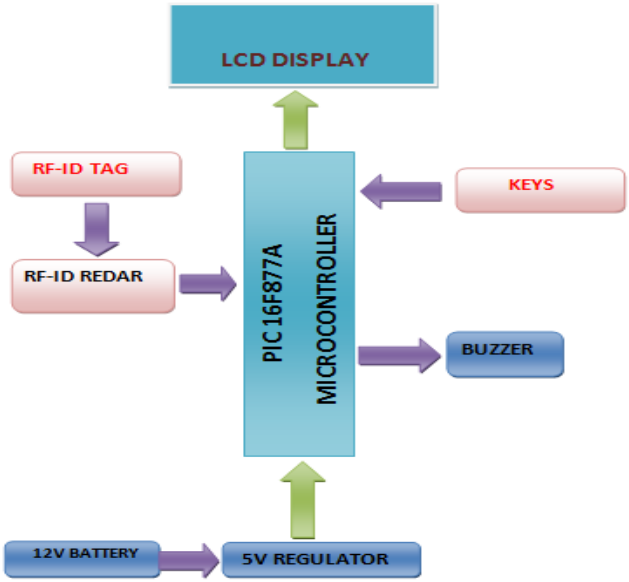

Fig.1. Basic block diagram of book finder using RFID technology

III. CIRCUIT REQUIREMENT

The components required for the implementation of book finder using RFID technology are following:

- The RFID TAG: We can divide RFID devices into two types: Active and Passive. Active tags require a power source, they are either connected to a powered infrastructure or use energy stored in an integrated battery. The lifetime of passive tags are limited by stored energy, balanced against the number of read operations the device must undergo. Example of active tag is transponder attached to an aircraft which is always on and gives information about the nationality while Lack device attached to car is an example of passive tag. A passive tag consists of an antenna, a semiconductor chip attached to antenna and some form of encapsulation. The tag antenna

captures energy and transfers the tag's ID (the tag's chip coordinates this process). The encapsulation maintains the tag's integrity and protects the antenna and chip from environmental conditions or reagents. The encapsulation could be a small glass vial or a laminar plastic substrate with adhesive on one side to enable easy attachment to goods.

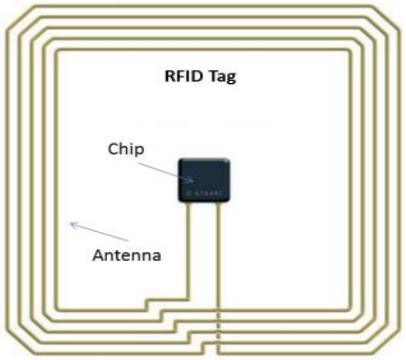

Fig.2. Basic RFID Tag

Two fundamentally different RFID design approaches exist for transferring power from reader to the tag: magnetic induction and electromagnetic wave capture. These two designs take advantage of EM properties associated with a RF antenna – the near field and the far field. Both can transfer enough power to a remote tag to sustain its operation-typically between 10W and 1mW, depending on the tag type. Through various modulation techniques, near and far field based signals can also transmit and receive data.

- RFID READER: The one being used, EM-18 RFID reader module operating at 125 KHz is an inexpensive solution for RFID based applications. The reader module comes with an on chip antenna and can be powered up with a 5V power supply. The module is turned on and transmit pin of module is connected to receive pin of microcontroller. Now, if the tag is within reading range, the card number will get thrown at the output.

  This EM-18 RFID reader supports EM4001 64 bit RFID tag. This communication interface used are TTL serial interface. It works according to specific ASCII communication protocol. The communication parameters are 9600bps. It works on 4.6-5.5 V with 10% tolerance. Current consumption of EM-18 RFID reader is found to be 50mA, <10 mA at power down mode. Reading distance up to 100mm, depending on tag. Antenna of EM-18 RFID reader module is integrated. The size of this reader module is found to be 32*32*8 mm. typical applications of this reefer module can be seen in e-payment, e-toll road pricing, access control, and authentication and printer/production equipment.

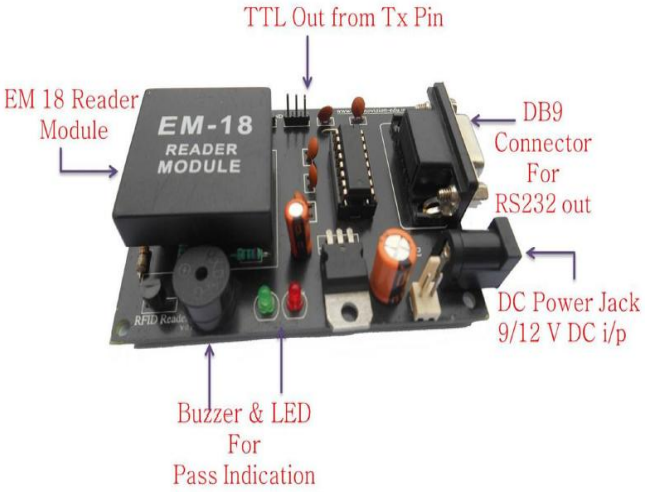

Fig.3. EM-18 RFID reader module.

- PIC16F877A MICROCONTROLLER: This powerful (200nsec instruction execution) yet easy to program (only 35 single word instructions) CMOS FLASH –based 8-bit microcontroller packs microchip's powerful PIC structure into an 40 pin package and is upward compatible with PIC16F877A devices. The PIC16F877A features 256 bytes of EEPROM data memory, self-programming, an ICD, 2 comparators, 8 channels of 10-bit analog to digital converter, 2 capture/compare/PWM functions, the synchronous serial port can be configured as either 3-wire Serial Peripheral Interface (SPI) or the 2-wire Inter-Integrated Circuit (I2C) bus and a Universal Asynchronous Receiver Transmitter (USART). All of these features make it ideal for more advanced level A/D applications in automotive, industrial applications and consumer applications.

  FEATURES: 2 PWM 10 bit, 256 bytes EEPROM data memory, ICD, 25 mA sink/source per I/O, Self-programming, parallel slave port

  .

Fig 4.PIC16F877A MICROCONTROLLER

- IC 7805: 7805 is a voltage regulator integrated circuit. It is a member of 78xx series of fixed linear voltage regulator ICs. The voltage source in a circuit may have fluctuations and would not give the fixed voltage output. The voltage regulator IC maintains the output voltage at a constant value. The xx in 78xx indicates the fixed output voltage it is designed to

provide. 7805 provides 5Vregulated power supply. Capacitors of suitable value can be connected at inputs and output pins depending upon the respective value of voltage levels. It is having three pin structure, names given to pins are Input, Ground and Output. Input voltage of range 5V to 18V can be given to first pin, second pin is kept grounded while the output pin gives regulated output of 5V (4.8V to 5.2V). This IC comes with thermal overload protection, short circuit protection and output transistor safe operating area protection.

- LCD DISPLAY: The LCD display used is based on Hitachi's HD44780 controller or which are compatible with HD44580. The LCD display have 14 pins, each having different function. This 16*2 intelligent alphanumeric dot matrix display is capable of displaying 224 different characters and symbols
- BUZZER: The piezo buzzer produces sound based on reverse of the piezoelectric effect. The generation of pressure variations or strain by the application of electric potential across a piezoelectric material is the underlying principle. These buzzers can be used to alert a user of an event corresponding to a switching action, counter signal or sensor input. They are also used in alarm circuit. The buzzer produces a same noisy sound irrespective of the voltage variations applied to it. It consists of piezo crystals between two conductors. When a potential is applied across these crystals, they push on one conductor and pull on other. This push and pull action, results in sound wave. Most buzzers produce sound in the range of 2-4KHz.

IV. RESULT

The results of our research and product specifications matches with each other. The results which we achieved from the project is very much similar to our theoretical model which itself has shown that we are on right path. We went ahead to answer the question that could barcode technology be replaced by something more eminent and timesaving technology and we answered it by successfully replacing it with RFID technology by using and implementing it on a very small prototype of modern day library.

Usage of this new technology of RFID would not just benefit the readers but it will also benefit the librarians while finding a lost book which used to be a huge problem when dealing with barcode technology. The approach while solving the problem of finding book intelligently and without getting tired of scanning each book was indeed right while pointing to the new technology of RFID to be used in this field . Our approach is rightly justified by the product that works more efficiently and more prominently than the barcode scanner. We did have pin pointed that it would save hours of time wasted while finding lost books, would help identifying them and keeping a record of them in more ordered way.Now critically evaluating our study , the end product is so much similar to what we thought of and the results provided by it does show similarity to its theoretical model, but like every product , it has it shortcomings out of which the most relevant ones are that tags can be cloned or they might be used for illicit tracking. This is also requiring more security as tags carry large data capabilities such as product maintenance, shipping history and expiry dates. RFID also involves assembling and inserting a computerized chip, which works out to be more expensive. That being said, it is a onetime investment and most of its drawbacks can be corrected with various aids.

V. CONCLUSION

We tried to replace the old and outdated barcode technology with more effective RFID technology to make an intelligent book finder as this not only saves our time but it also have several upper hands over the old barcode technique.

The problem of wastage of time while finding a lost book in a library is very big and RFID technology can help. Not only this serves as an alternative of barcode or QR code, it also provides us with a more scientific approach towards this problem of identification and tracking of books (in this research).A RFID tag is sealed with each book and thus giving them a unique identification. In the reader module, we have operating frequency of 125 KHz. The tag antenna, under the effect of reader in range of 100mm, captures energy and transfers the tag's ID thus finding the book. Also, while finding a book among pile of books, we need to enter the unique ID of book (RFID tag of that book) in reader, and we just need to sweep the area, if book is there, buzzer will give signal.

We have used RFID in the lightest way possible, in the form of book finder. We can also use this technology in defense, airlines, spying agencies, shopping malls, access control, e-tickets and many more projects are still under research.

VI. FUTURE SCOPE

RFID technology is poised for some significant advancements fueled by what analysts say will be more rapid growth in healthcare, retail, food safety, and other markets. The future of RFID is growing and expanding as more industries and companies invest in the technology. As a result, RFID is becoming more cost-effective than ever for solving real – world business challenges.

A Research and Markets report forecasts global sourcing of RFID tags to have a compound annual growth rate of 22.4% through 2018. Yet another report puts the smart label market at $10 billionby 2020.

RFID will increasingly be one part of a whole ecosystem of sensors and communication technologies that will help company's better monitor and manage assets and shipments.

Passive sensors for temperature, moisture, pressure, vibration and other factors will be combined with RFID to provide even more intelligence form the edge of the enterprise.RFID can potentially enable a whole host of new applications in the retail, healthcare, manufacturing and other sectors, but one stumbling block has always been management of the data flowing in from thousands of tags. With cloud-based applications and services taking the heavy lifting of IT support away from the point of activity, companies can now deploy centrally managed and centrally available solutions without the traditional support and deployment costs.The RFID industry is about to enter an exciting period in which increased adoption will provide the means for technology providers to invest in new, exciting innovations. Along with the new developments described above advancements in materials, organic polymers, nano technology, and other areas will change the way RFID is incorporated into products. Instead of a tag attached to a garment, for example, an RFID transponder could be printed directly into cloth or packaging using biodegradable conductive inks.

The future of RFID is here, so both end users and RFID manufacturers should be prepared to leverage these new technologies and ready themselves for more widespread use of RFID.

REFERENCES

[1]. RFID: A Guide to Radio Frequency Identification, Pedro M. Reyes, Mcgraw-Hill Education, 2011
[2]. Mike Meyers' CompTIA, Mark Brown, Sam Patadia and SanjivDua, McGraw-Hill-Osborne, 2007
[3]. RFID Implementation, Dennis Brown, McGraw-Hill Education, 2006
[4]. RFID for Dummies, Patrick J. Sweeney, Wiley Publishing, 2016