Parameter Monitoring for Precision Agriculture

Kiruthika M[1], ShwetaTripathi[2], Mritunjay Ojha[2], Kavita S[2]

[1]*Associate Professor, Department of Computer Engineering, Fr.C.R.I.T, University of Mumbai, India*

[2]*Assistant Professor, Department of Computer Engineering, Fr.C.R.I.T, University of Mumbai, India*

Abstract: **Current scenario of Indian Farming needs a technological revolution. Precision Agriculture being a technique of applying the right amount of input (water, fertilizer, pesticides etc.) at the right location and at the right time in an agricultural farm to increase the production and hence improve the quality of the crops, utilizes different wireless sensors connected to each other. Monitoring the environmental parameters and analyzing them for an improvement in Indian farming is the impetus of this research. The productivity of the varied range of crops grown in contrastive weather in different atmospheric conditions in the country can be increased by monitoring the environmental parameters. Consequently the prominence of the paper elucidates the system design to monitor the environmental parameter using wireless sensor network.**

Key Words: Wireless Sensor Network, Precision Agriculture, Zigbee, GPS.

I. INTRODUCTION

Around 55 percent of the Indian population depends on farming. Because of poor availability of funds, farm inputs, poor support price structure for the produce and almost no farm insurance, farming in India is non-remunerative and 50 percent of farmers are in debt which is the main reason for a large number of suicides [1].

In the existing agricultural scenario, India is characterized by small farms with around 80 percent of total holdings less than 2 hectares (5 acres) and land mostly rainfed with only 30 percent irrigated. India, though one of the biggest producers of agricultural products, has very low farm productivity, with the average only 33 percent of the best farms world over. This needs to be increased so that farmers can get more remuneration from the same piece of land with less labor. Precision agriculture (PA) may provide a way to do it.

Originating in US and European countries where farms are generally big (over 100 hectares), it sees extensive use of Global Positioning Satellite (GPS) for precise mapping of farms and with appropriate software the farmer is informed about status of his crop and which part of the farm requires inputs like water, fertilizer and pesticide etc.

PA in western countries is also characterized by increased mechanization with the use of heavy farm machinery (average power 100-200 kW) for all the farm and field operations such as sowing, harvesting, weeding, baling etc. The machinery runs on fossil fuels and uses about 63 percent of the total energy used in farming which is a significant amount.

PA for small farms, on the other hand, can use small farm machinery and robots which may also be amenable to run on renewable fuels like bio oil, compressed biogas and electricity produced on farms by agricultural residues. The energy efficiency of the machinery and operations could also be improved.

For small farms, precision agriculture may include sub-surface drip irrigation for precise water and fertilizer application to the crops and robots for sowing, weed removal, harvesting and other farming operations. Some of these robots are already being used on small farms in US and Europe and with vigorous R&D taking place, it is expected that they may be deployed in large scale in near future.

Since farm size is small in India there is a lot of scope of Precision Agriculture applications.

Precision farming is the ability to handle variations in productivity within a field and maximize financial return, reduce waste and minimize impact of the environment using automated data collection, documentation and utilization of such information for strategic farm management decisions through sensing and communication technology. The Precision Agriculture is defined as the technique of applying the right amount of input (water, fertilizer, pesticides etc.) at the right location and at the right time to enhance production and improve quality, while protecting the environment [2].

Most of the Precision Agricultural application uses WSN for data collection in agricultural field. This collected data is sent to a local or remote server where the computational and storage power is available. This data is then processed, analyzed in the server. Based on the interpretation of the data farm equipments can be controlled in real time.

II. LITERATURE SURVEY

Efficient water management is a major concern in many crop systems. WST have a big potential to represent the inherent soil variability present in fields with more accuracy than the current systems available. Thus, the benefit for the producers is a better decision support system that allows to maximize their productivity while saving water. Also, WST eliminates difficulties to wire sensor stations across the field and reduces maintenance cost. Since installation of WST is easier than existing wired solutions, sensors can be more densely deployed to

provide local detailed data. Instead of irrigating an entire field in response to broad sensor data, each section could be activated based on local sensors. Six-span center pivot irrigation system can be used as a platform for testing two WSN of infrared thermometers. The proposed irrigation management system in [2] using intelligent humidity sensor and low power wireless Trans receiver can be used to collect the data and record SWT for facilitating irrigation management. The monitoring device used in this paper is a laptop/computer or PDA. The processed SWT data make it possible to determine soil moisture trends and to predict or modify irrigation schedule for better crop yield. The proposed system in [3] i.e. automatic irrigation controller is open loop, automatic and adaptive. This system determines the soil moisture and necessity of water to crop in order to supply just the right amount of water just enough to maintain moisture level. A microcontroller is used to control the operation along with relay switch and pump. The proposed system in [4] uses the sensor node that include JN5121 module, an IEEE 802.15.4/zigbee wireless microcontroller. The sink node for data aggregating was based on ARM9. GPRS gateway was used for long distance data transmission. The mobile unit was used as monitoring device. The proposed system in [5], a study of zigbee based wireless sensor network in agriculture was carried out. This paper has reviewed few issues regarding zigbee in agriculture, about how the factors like node spacing, antenna height, crop canopy and density of leaves affects the signal strength. The energy efficient WSN for agriculture proposed in [6] uses the sensor node equipment with CC1110 system on chip with low power RF Tran's receiver and 8051 MCU from Texas. A CC 1110 evaluation module plugged into smart RF04 evaluation board who's LCD and LED buttons are readily available for monitoring and control. The hardware allows radio transmission in multiple power levels and also allow user to change receiver sensitivity. To compare the performance of PDMAC with SMAC, the behavior of two nodes, a sender and a receiver was simulated using TOSSIM.

Art of wireless sensor technology in agriculture shows the path to the rural farming community about how to replace some of the traditional techniques. According to paper [9-10], research on the modern agriculture are becoming increasingly concentrated on monitoring and controlling the entire greenhouse yielding process. WSN in agriculture helps in distributed data collection, monitoring in harsh environments, precise irrigation and fertilizer supply to produce profuse crop production while diminishing cost and assisting farmers in real time data gathering. Hence Wireless sensor networks (WSN) technologies have now become a backbone for modern precision agriculture monitoring [12]. There are several sensors, motes which can be deployed in the field to measure various environmental parameters like soil moisture, soil pH, leaf wetness, atmospheric pressure. They can be either on board sensors or external sensors which can be used for the above purpose. Analysis of data can be done remotely using Data Management Software Tools.

III. PROPOSED SYSTEM

In the Precision Agriculture (PA), various techniques are available to monitor and control the required environmental parameters for a particular crop. It is particularly crucial to analyze the methods which can effectively manage the proper environment. The use of wireless sensor network for the large and small area is now becoming popular in precision farming agriculture. We would like to propose a system where farmers can easily keep track of the desired crop's environment conditions. To fulfill this requirement environmental parameter sensors such as Temperature sensor, humidity sensor, light sensor etc can be used. All these sensors can be connected to server or sink node without wire.

This paper presents architecture for monitoring and analyzing the environmental parameters like soil moisture, light intensity, temperature, humidity using wireless sensor network which
would help in crop monitoring remotely. Analysis of the monitored parameters helps in interpreting the data which is in precise form and can be used for improving the crop production.

The architecture proposed here helps in monitoring and analyzing the environmental parameters like soil moisture, light intensity, temperature, humidity etc at any crop field.

The components of the architecture include: Each Sensor Node consists of 2.4 Ghz MICAZ Mote, a compliant Data Acquisition Board (DAB) (having on board temperature and humidity sensors), external sensors for soil moisture and light intensity. Each Head node consists of 2.4 Ghz MICAZ Mote. The base station consists of Root Node (2.4 Ghz MICAZ Mote) connected to a workstation.

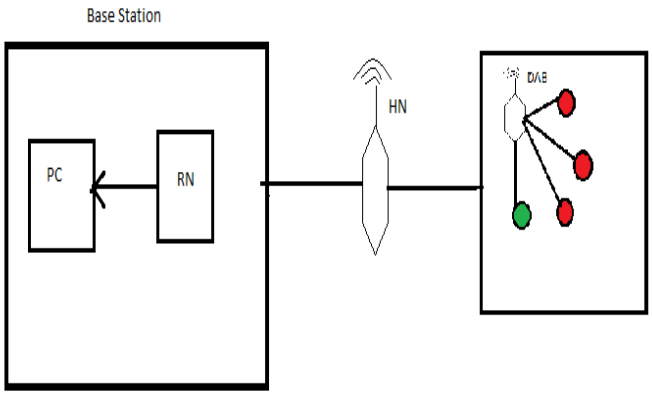

Fig. Proposed Architecture

Each sensor senses the data based on the parameter and passes the data to the DAB which is extremely versatile. From there the data gets passed to the Head Node and then it moves to the Root Node which is connected to the workstation. Processing and interpretation of the data is done at the workstation and the result drawn out is in a precise form which can be used for improving crop production.

The above system can be implemented using the following aspects:

1. Sensor Network Deployment: The monitoring network can be deployed in a demo farm in the form of an experimental setup.
2. Data Collection: Temporal and spatial variations in temperature, humidity, soil moisture and light intensity can be measured continually and collected at the workstation.
3. Data analysis: MEMSIC's MoteView Software can be used for data analysis. MEMSIC's MoteView Software is designed to be the primary interface between a user under deployed network of wireless sensors. It also provides an interface for data management along with sensor visualization and analysis tools.

IV. CONCLUSION

Use of WSN technology in Precision Agriculture will help the farmers to know the exact values of the requirements that they need to improve the crop productivity. The analysis of these parameters helps them in taking better decisions at the right time and at the right location. Hence the proposed work intends to transform the Indian farmers not only from predicting the parameters but to deal with the actual values which would be beneficial for their farms.

REFERENCES

[1]. Is precision agriculture the solution to India's farming crisis? By Anil Rajvanshi | IANS

[2]. Kshitij shinghal, Dr. Arti noor, Dr. Neelam srivastava,Dr. Raghuvir singh, wireless sensor networks in agriculture: for potato farming.

[3]. Prakash gaud patil, vidya h2, shreedevi patil, umakant kulkarni, wireless sensor network for precision agriculture, 2011.

[4]. Jianfa Xia, Zhenzhou Tang, *Xiaoqiu Shi, Lei Fan, Huaizhong Li, An environment monitoring system for precise agriculture based on wireless sensor networks, 2011.

[5]. A Survey on Zigbee Based Wireless Sensor Networks in Agriculture T. Kalaivani, A. Allirani, P. Priya, 2011 IEEE.

[6]. Herman Sahota Ratnesh Kumar Ahmed Kamal Jing Huang, an Energy-efficient Wireless Sensor Network for Precision Agriculture, 2010 IEEE.

[7]. Akyildiz I.F., Stuntebeck E.P. Wireless underground sensor networks: Research challenges. Ad Hoc Netw. 2006; 4:669–686

[8]. An Effective Method for Crop Monitoring Using Wireless Sensor Network N. Sakthipriya Department of Computer Science and Engineering, Bharath University, Chennai, India

[9]. Narasimhan, V. Lakshmi, Alex A. Arvind and Ken Bever, 2007. Greenhouse Asset Management Using Wireless Sensor- Actor Networks, Proceeding of Int. Conf. On Mobile Ubiquitous Computing, Systems, Services and Technologies, pp: 9-14.

[10]. Luo, H.Q., X. Zhang, E. Liu, X.J. Qiao and Y.H. Zhang, 2006. The Design of Wireless Sensor in Greenhouse nvironment Measurement. Sensor World, 12(5): 45-48.

[11]. Yang, Wang, Huang Liusheng, Wu Junmin and Xu Hongli., 2007. Wireless Sensor Networks for Intensive Irrigated Agriculture, Proceeding of Int. Conf. On Consumer Communications and 11 Kumarave, A. and Networking, pp: 197-201.

[12]. Miskam, Muhamad Azman, Azwan bin Nasirudin and Inzarulfaisham Abd., 2009. Rahim Preliminary Design on the Development of Wireless Sensor Network for Paddy Rice Cropping Monitoring Application in Malaysia, European Journal of Scientific Research ISSN 1450-216X, 37(4): 649-657

[13]. Mrs. Poonam Chhimwal, Dhajvir Singh Rai, Deepesh Rawat: Comparison between Different Wireless Sensor Simulation Tools. In:IOSR Journal of Electronics and Communication Engineering (IOSR-JECE) e-ISSN: 2278-2834,p- ISSN: 2278-8735. Volume 5, Issue 2 (Mar. - Apr. 2013), PP 54-60.